Professional PTZ Camera

Wall Mount Installation Guide

1. Drill pilot holes through the template and into the wall, then remove the template. Insert anchors and screws through the bracket and tighten to the wall.

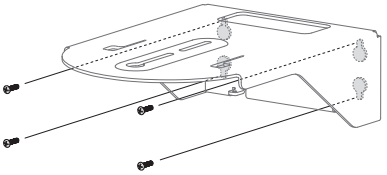

2. Pass the cables through the hole on the bracket and connect them.

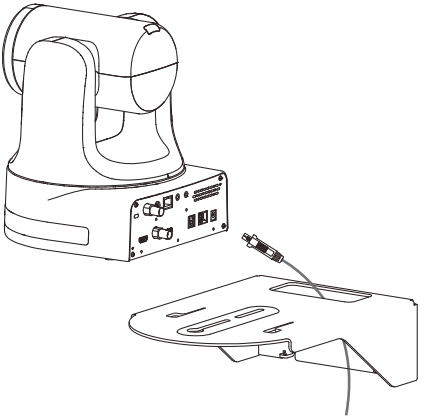

3. Secure the camera to the bracket with the included 1/4”-20, L=7.5 mm screws (x2). Use the cable ties to secure the cables to the bracket.

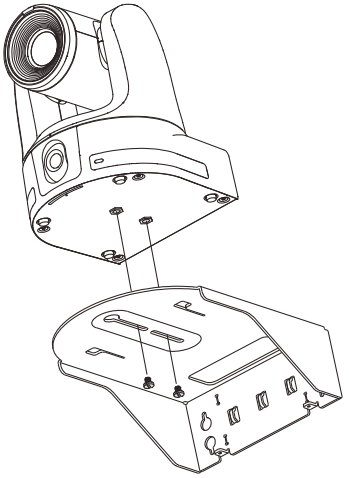

4. Place the cable cover over the cables and into the slots. Secure the cover to the bracket with the included M3 x 5 mm screws (x2).

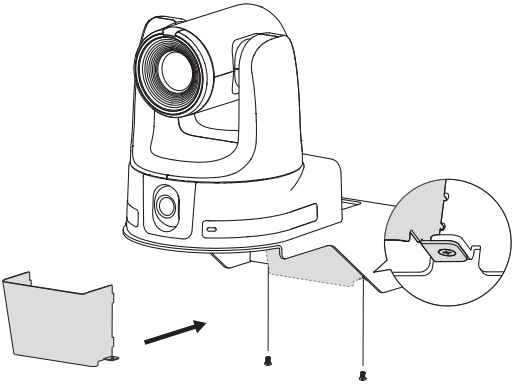

©2024 AVer Information Inc. All rights reserved.

P/N: 300AS933-EPJ
© 2024 AVer Information Inc. All rights reserved. | May 27, 2024
The information contained in this documentation is subject to change without notice.

Wall Mount Drill Template

Screws: M4 x 20 mm (x4)

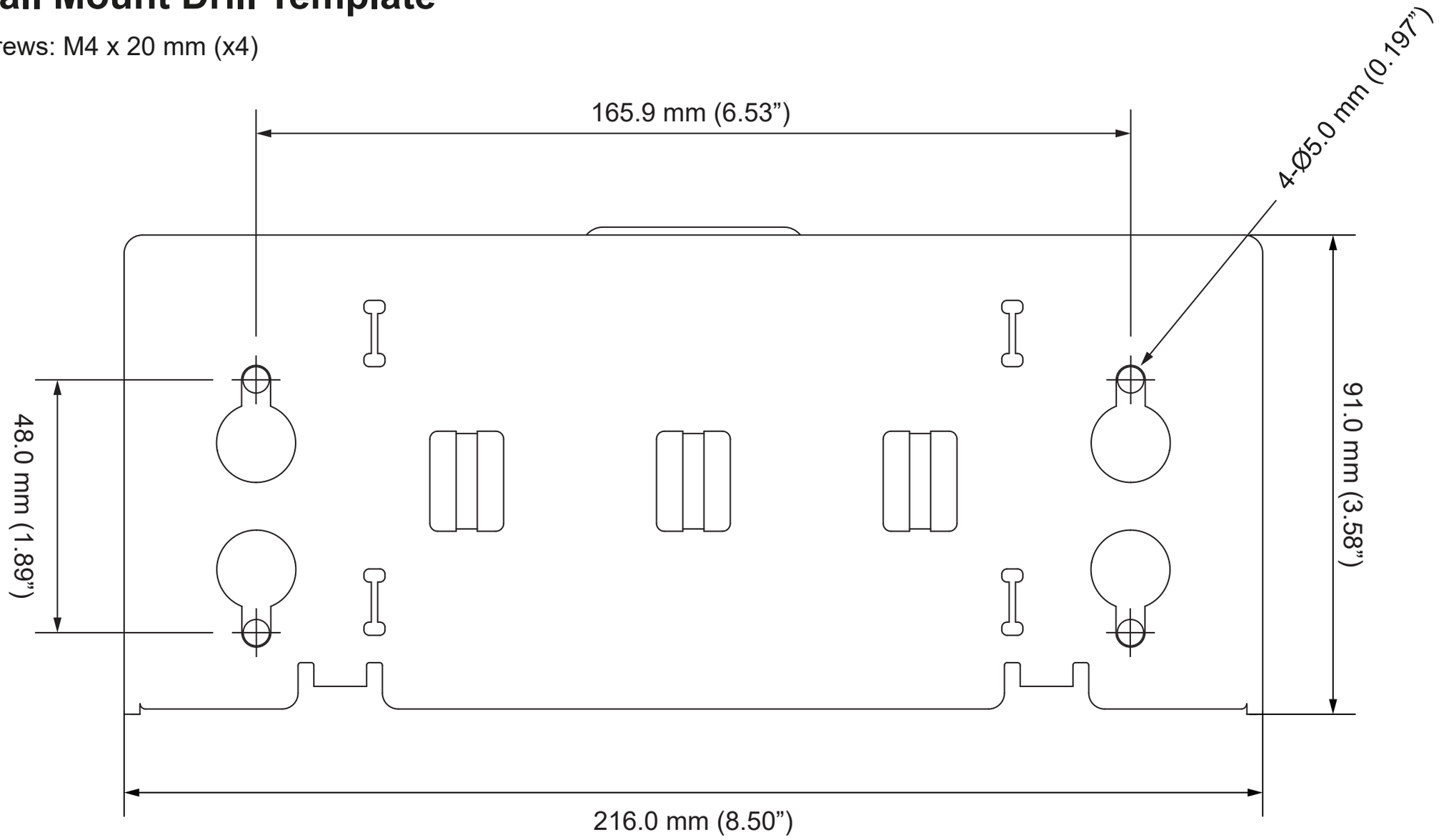

P/N: 303AS933-AL7